MECHANICAL BRAKE

SECONDARY STOP OR PARK, HEAVY DUTY

610M

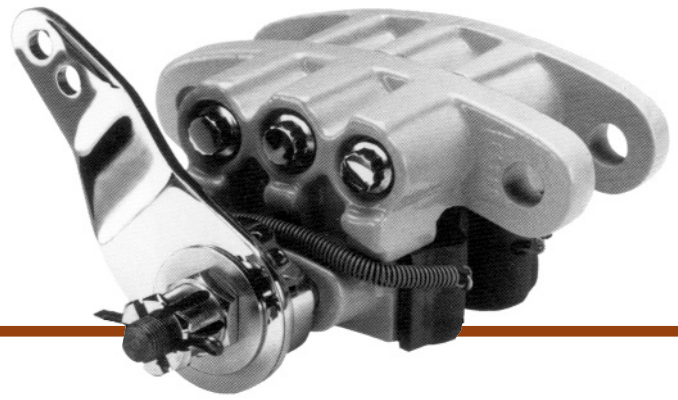

FEATURES:

- Capable of 7,000 lbs. of clamp force.
- Cast nodular iron housing.
- Designed for quick change friction pads.
- Unique dual mounting lugs fit either fixed or floating mounts.
- Pad wear adjustment quickly completed by removal of cotter pin and adjustment to takeup nut.
- Quick rise on cam for maximum lever efficiency.
- Both CW and CCW lever actuation.

TYPICAL SPECIFICATIONS:

Series	610M
Rotor Diameter	10 to 30 inches
Rotor Thickness	0.375 to 1.00 in.
Maximum Lever Force @ 4.375" Hole	700 lbs.
@ 3.750" Hole	816 lbs.
Maximum Lever Stroke	45 deg.
Lining Type	non asbestos, organic or sintered
Total Lining Area	9 sq. in.
Usable Lining Thickness Per Pad	0.29 in.
Lever Positions	30 degree increments
Weight	13.75 lbs.

Note: Two style cams are available, if this unit is to be spring actuated, consult HB for proper cam.

TYPICAL BRACKET CONFIGURATION:

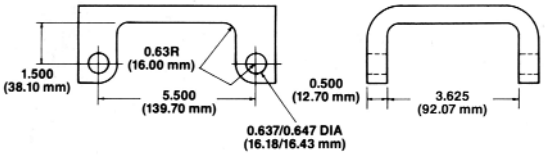

Specifications are guidelines only and subject to change. Consult HB for specific model, part number and assembly drawings.

REFERENCE DIMENSIONS:

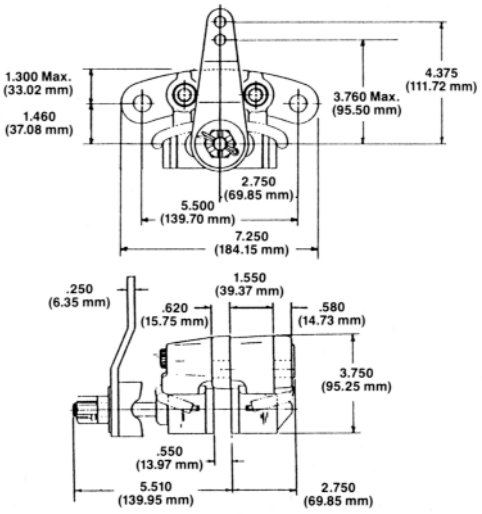

TORQUE INFORMATION:

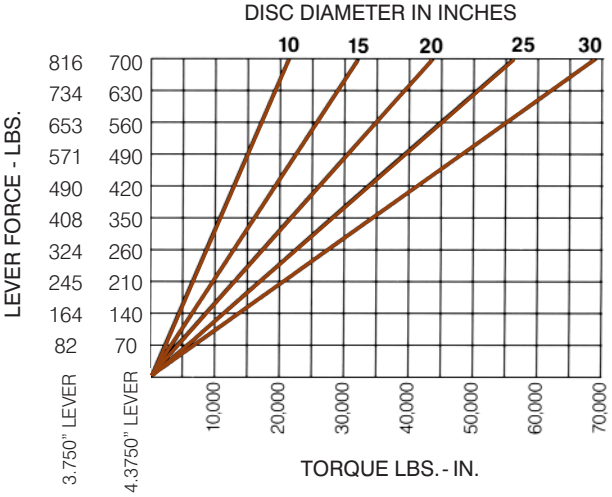

Formula $T = 20\,\mu F \left(\frac{DIA}{2} - 0.875\right)$ for 4.375" Lever

T = developed torque in lbs.-in.
F = applied lever force in lbs.
DIA = diameter of rotor in inches
μ = friction coefficient, assume 0.35

HB Performance Systems Inc.
5800 West Donges Bay Road
Mequon, Wisconsin 53092
Phone (262) 242-4300
Fax (262) 242-0524
www.hbpsi.com

Printed in USA